ELECTRONIC INCLINOMETER

NEI-3000

NSR's new Electronic Inclinometer:

- Meet the IMO and ISO standards
- High accuracy and stability
- Large color LCD, touch screen operation
- Android O/S for easy operation
- Log for Heel Angle and Pitch Angle
- Data interface to BAM/INS
- Type approval with DNV (MED) and CCS

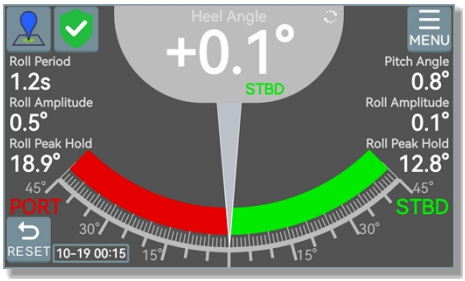



- NEI-3000 electronic inclinometer is designed for vessel navigation, which provides heel and pitch measuring functions.
- NEI-3000 measures and displays heel angle, roll period, roll amplitude and pitch angle etc.
- Additional log of heel angle for the latest 3 minutes and roll amplitude for the latest 30 minutes.
- NEI-3000 conforms to the standards of IMO MSC.363 (92), MSC.302 (87) and ISO 19697.

DNV CCS ANDROID COLOR DISPLAY TOUCH SCREEN BAM

SPECIFICATIONS

- Heel Angle: Range: ± 90°, Accuracy: ±1°
- Roll Amplitude: Range: ± 90°, Accuracy: ±1°
- Roll Period: Range: 4~ 40s, Accuracy: ±1s
- Pitch Angle: Range: ± 90°, Accuracy: ±1°
- O/S: Android
- LCD Display: 7-inch, touch screen operation
  1024×600 dots resolution
- Interface: I/O sentence (IEC 61162-1 & IEC 61162-2)
- Power Supply: DC 24 V (range 9 V ~ 36 V)
- Power Consumption: <10W
- Size: 145 (H) × 264 (W) × 83 (D) mm (Display Unit)
- Weight: 1.3 kg (Display Unit), 0.7 kg (Sensor Unit)
- Operating Temperature: -20°C ~ +55°C
- IP Grade: IP22

EQUIPMENT LIST

- **STANDARD**

- Display Unit	NEI-3000D	1 pc
- Sensor Unit	NEI-3000S	1 pc
- Accessories		1 set

- **OPTIONS**

- Remote Unit	NEI-3000R	1 pc
- Dimmer Controller	NDC-100	1 pc



SYSTEM DIAGRAM

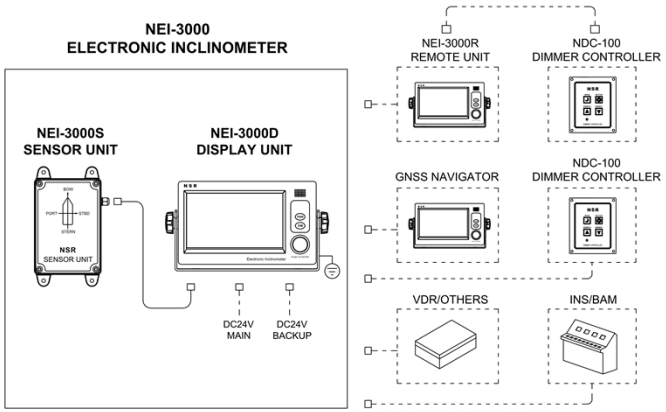

SIZE DIMENSION

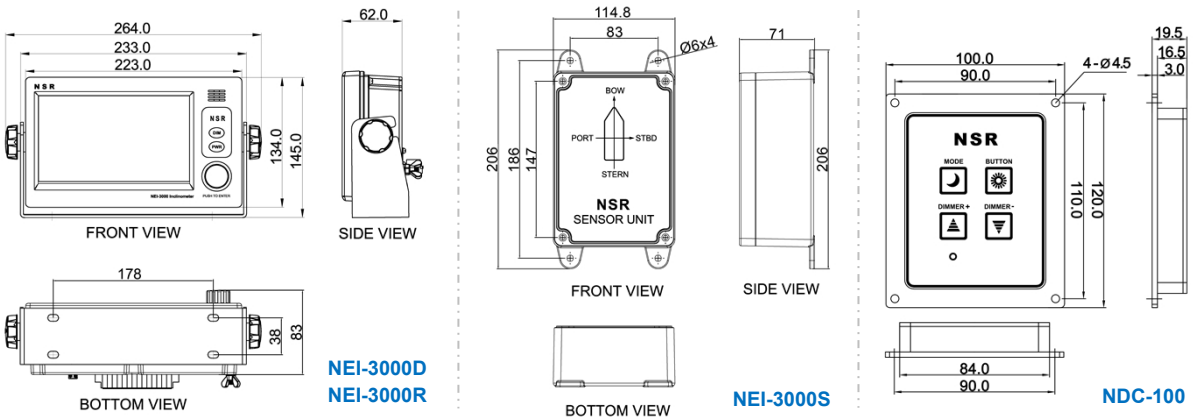

※ *Specifications subject to change without notice*